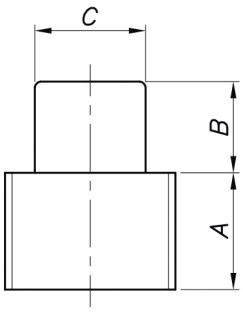

PLUG QUADRADO

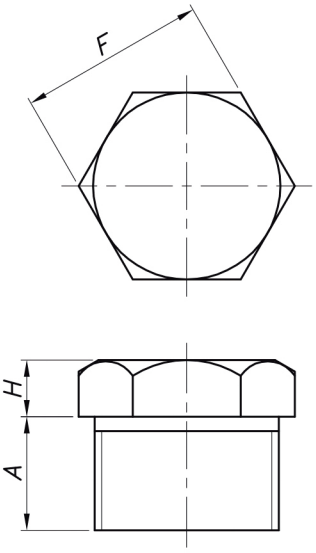

PLUG SEXTAVADO

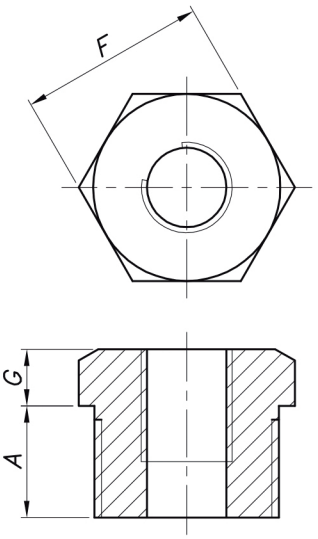

BUCHA SEXTAVADA

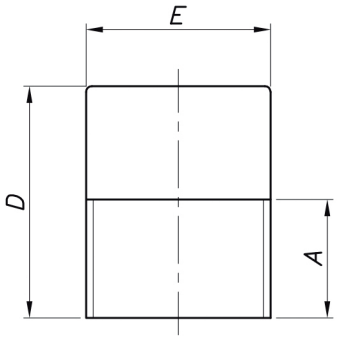

PLUG REDONDO

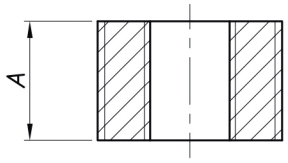

BUCHA

ø NOM. POL. (INCH)	A		PLUG QUADRADO				PLUG REDONDO				PLUG SEXTAVADO / BUCHA				
			B		C		E		D		F		G	H	
	Nom.	Max. *	Min.	Max. *	Min.	Max. *	Min.	Toler. *	Min.	Max. *	Min.	Toler. *	Min.	Min.	Max. *
1/8	10.0	11.0	6.0	7.2	7.15	8.0	10.0	±0.2	35.0	35.8	11.11	±0.2	3.0 *	6.0	6.4
1/4	11.0	12.0	6.0	7.2	9.55	10.8	14.0	±0.2	41.0	41.8	15.88	±0.2	3.0	6.0	6.4
3/8	13.0	14.0	8.0	8.8	11.11	11.9	18.0	±0.2	41.0	41.8	17.46	±0.2	4.0	8.0	8.4
1/2	14.0	16.0	10.0	10.8	14.29	15.1	21.0	±0.2	44.0	44.8	22.23	±0.2	5.0	8.0	8.4
3/4	16.0	17.0	11.0	15.1	15.88	16.8	27.0	±0.2	44.0	44.8	26.99	±0.2	6.0	10.0	10.4
1	19.0	20.0	13.0	16.7	20.64	21.8	33.0	±0.2	51.0	52.2	34.93	±0.2	6.0	10.0	10.4
1.1/4	21.0	22.0	14.0	18.3	23.81	24.8	43.0	±0.4	51.0	52.2	44.45	±0.4	7.0	14.0	14.4
1.1/2	21.0	23.0	16.0	20.6	28.58	29.8	48.0	±0.4	51.0	52.2	50.80	±0.4	8.0	16.0	16.4
2	22.0	25.0	18.0	22.2	33.27	34.5	60.0	±0.4	64.0	65.2	63.50	±0.4	9.0	18.0	18.4
2.1/2	27.0	32.0	19.0	24.6	38.10	39.3	73.0	±0.4	70.0	71.2	76.20	±0.4	10.0	19.0	19.4
3	28.0	35.0	21.0	26.2	42.86	44.1	89.0	±0.4	70.0	71.2	88.90	±0.4	10.0	21.0	21.4
4	32.0	42.0	25.0	32.6	63.50	66.2	114.0	±0.4	76.0	77.2	117.48	±0.4	13.0	25.0	25.4

* – TOLERÂNCIAS ADOTADAS COMO PADRÃO QG, PERMITIDAS CONFORME ASME B16.11 PARÁGRAFO 6.1

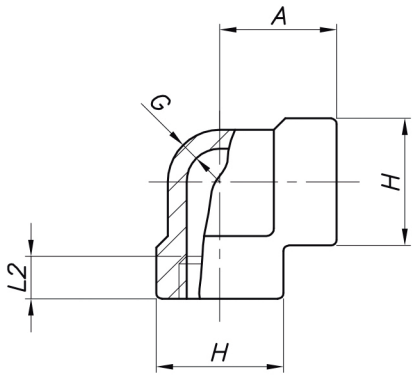

COTOVELO 90°

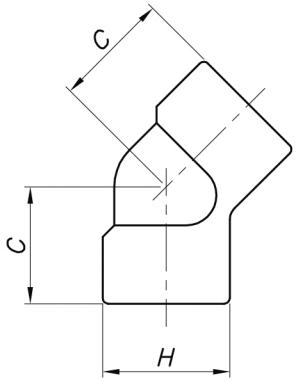

COTOVELO 45°

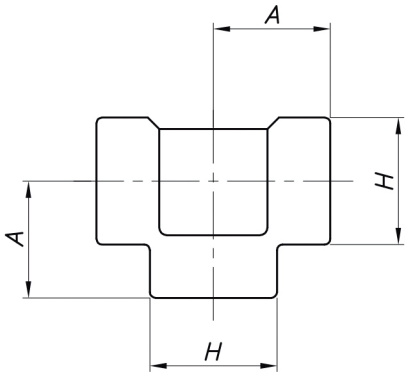

TEE

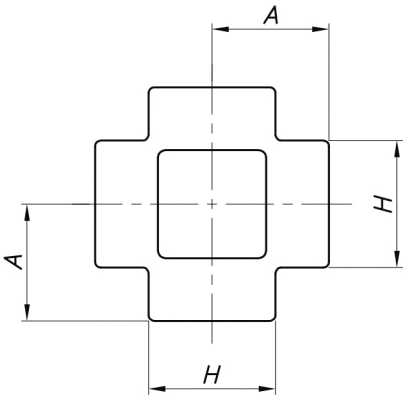

CRUZETA

ø NOM. POL. (INCH)	A			C			H			G			L2	
	2000	3000	Toler. *	2000	3000	Toler. *	2000	3000	Toler. *	2000	3000	Toler. *	Min	Toler. *
1/8	21.0	21.0	±0.6	17.0	17.0	±0.6	22.0	22.0	±0.6	3.18	3.18	−0.2/+0.4	6.7	−0/+1
1/4	21.0	25.0	±0.6	17.0	19.0	±0.6	22.0	25.0	±0.6	3.18	3.30	−0.2/+0.4	10.2	−0/+1
3/8	25.0	28.0	±0.6	19.0	22.0	±0.6	25.0	33.0	±0.6	3.18	3.51	−0.2/+0.4	10.4	−0/+1
1/2	28.0	33.0	±0.6	22.0	25.0	±0.6	33.0	38.0	±0.6	3.18	4.09	−0.2/+0.4	13.6	−0/+1
3/4	33.0	38.0	±0.6	25.0	28.0	±0.6	38.0	46.0	±0.6	3.18	4.32	−0.2/+0.4	13.9	−0/+1
1	38.0	44.0	±0.6	28.0	33.0	±0.6	46.0	56.0	±1.0	3.68	4.98	−0.2/+0.4	17.3	−0/+1
1.1/4	44.0	51.0	±0.6	33.0	35.0	±0.6	56.0	62.0	±1.0	3.89	5.28	−0.2/+0.4	18.0	−0/+1
1.1/2	51.0	60.0	±0.6	35.0	43.0	±0.6	62.0	75.0	±1.0	4.01	5.56	−0.2/+0.4	18.4	−0/+1
2	60.0	64.0	±1.2	43.0	44.0	±1.2	75.0	84.0	±1.0	4.27	7.14	−0.2/+0.6	19.2	−0/+1
2.1/2	76.0	83.0	±1.2	52.0	52.0	±1.2	92.0	102.0	±1.2	5.61	7.65	−0.2/+0.6	28.9	−0/+1
3	86.0	95.0	±1.2	64.0	64.0	±1.2	109.0	121.0	±1.2	5.99	8.84	−0.2/+0.6	30.5	−0/+1
4	106.0	114.0	±1.2	79.0	79.0	±1.2	146.0	152.0	±1.2	6.55	11.18	−0.2/+0.6	33.0	−0/+1

* – TOLERÂNCIAS ADOTADAS COMO PADRÃO QG, PERMITIDAS CONFORME ASME B16.11 PARÁGRAFO 6.1

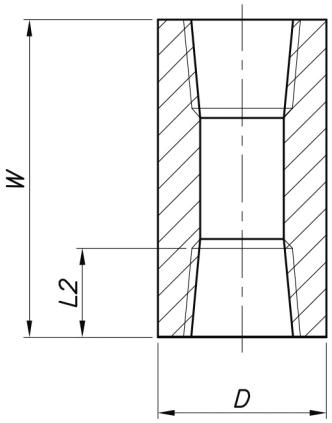

LUVA

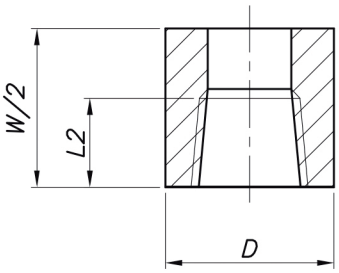

MEIA–LUVA

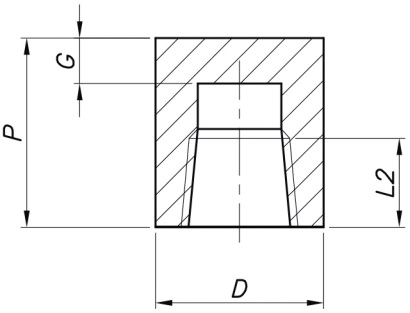

CAP

ø NOM. POL. (INCH)	W		W/2		P		D		G		L2	
	Nominal	Tol.(±) *	Nominal	Tol.(±) *	Nominal	Tol.(±) *	Nominal	Tol.(±) *	Nominal	Max	Min	Max
1/8	32.0	±0.4	16.0	±0.4	19.0	±0.4	16.0	±0.2	4.8	5,2	6,7	7,7
1/4	35.0	±0.4	17.5	±0.4	25.0	±0.4	19.0	±0.2	4.8	5,2	10,2	11,2
3/8	38.0	±0.4	19.0	±0.4	25.0	±0.4	22.0	±0.2	4.8	5,2	10,4	11,4
1/2	48.0	±0.4	24.0	±0.4	32.0	±0.4	28.0	±0.2	6.4	6,8	13,6	14,6
3/4	51.0	±0.4	25.5	±0.4	37.0	±0.4	35.0	±0.2	6.4	6,8	13,9	14,9
1	60.0	±0.4	30.0	±0.4	41.0	±0.4	44.0	±0.2	9.7	10,1	17,3	18,3
1.1/4	67.0	±0.8	33.5	±0.4	44.0	±0.4	57.0	±0.2	9.7	10,1	18.0	19,0
1.1/2	79.0	±0.8	39.5	±0.4	44.0	±0.4	64.0	±0.2	11.2	11,6	18,4	19,4
2	86.0	±0.8	43.0	±0.4	48.0	±0.4	76.0	±0.4	12.7	13,1	19,2	20,2
2.1/2	92.0	±0.8	46.0	±0.4	60.0	±0.4	92.0	±0.4	15.7	16,1	28,9	29,9
3	108.0	±0.8	54.0	±0.4	65.0	±0.4	108.0	±0.4	19.0	19,4	30,5	31,5
4	121.0	±0.8	60.5	±0.4	68.0	±0.4	140.0	±0.4	22.4	22,8	33,0	34,0

* – TOLERÂNCIAS ADOTADAS COMO PADRÃO QG, PERMITIDAS CONFORME ASME B16.11 PARÁGRAFO 6.1

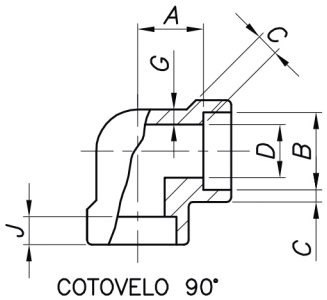

COTOVELO 90°

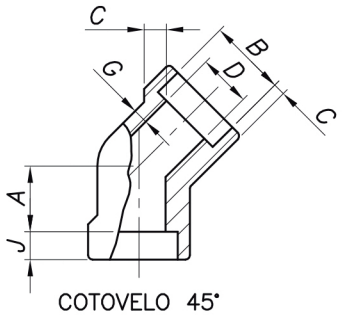

COTOVELO 45°

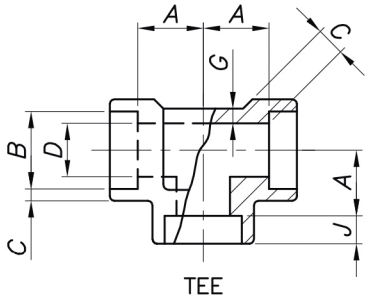

TEE

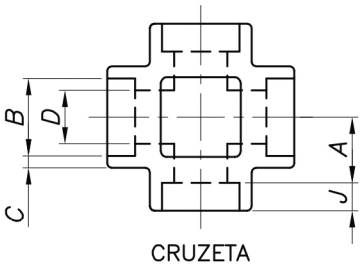

CRUZETA

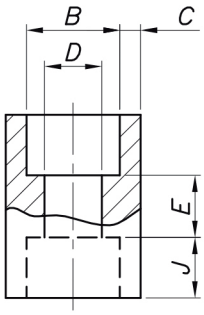

LUVA

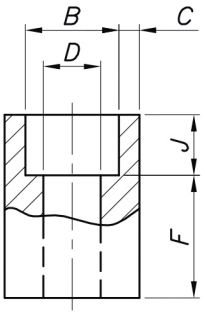

MEIA–LUVA

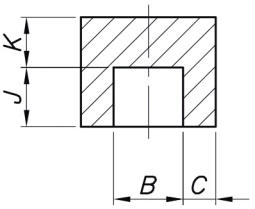

CAP

Ø NOM. POL. (INCH)	B		D		C		G		J		A			E		F		K	
	Min.	Max.	Min.	Max.	Min.	Max. *	Min.	Max. *	Min.	Max. *	Cotov. 45°	Outros	Toler. +/−	Med.	Toler. +/−	Med.	Toler. +/−	Min.	Max. *
1/8	10.8	11.2	6.1	7.6	3.18	3.70	2.41	3.20	9.5	10.0	8.0	11.0	1.0	6.5	1.5	16.0	1.5	4.8	5.2
1/4	14.2	14.6	8.5	10.0	3.30	4.00	3.02	3.80	9.5	10.0	8.0	11.0	1.0	6.5	1.5	16.0	1.5	4.8	5.2
3/8	17.6	18.0	11.8	13.3	3.50	4.50	3.20	4,00	9.5	10.0	8.0	13.5	1.5	6.5	3.0	17.5	3.0	4.8	5.2
1/2	21.8	22.2	15.0	16.6	4.09	5.30	3.73	4,60	9.5	10.0	11.0	15.5	1.5	9.5	3.0	22.5	3.0	6.4	6.8
3/4	27.2	27.6	20.2	21.7	4.27	5.50	3.91	4.80	12.5	13.0	13.0	19.0	1.5	9.5	3.0	24.0	3.0	6.4	6.8
1	33.9	34.3	25.9	27.4	4.98	6.40	4.55	5.40	12.5	13.0	14.0	22.5	2.0	12.5	4.0	28.5	4.0	9.6	10.0
1.1/4	42.7	43.1	34.3	35.8	5.28	6.90	4.85	5.70	12.5	13.0	17.5	27.0	2.0	12.5	4.0	30.0	4.0	9.6	10.0
1.1/2	48.8	49.2	40.1	41.6	5.54	7.20	5.08	5.90	12.5	13.0	20.5	32.0	2.0	12.5	4.0	32.0	4.0	11.2	11.6
2	61.2	61.7	51.7	53.3	6.04	7.80	5.54	6.50	16.0	16.5	25.5	38.0	2.0	19.0	4.0	41.0	4.0	12.7	13.1
2.1/2	73.9	74.4	61.2	64.2	7.67	9.90	7.01	8.00	16.0	16.5	28.5	41.0	2.5	19.0	5.0	43.0	5.0	15.7	16.1
3	89.8	90.3	76.4	79.4	8.30	10.70	7.62	8.50	16.0	16.5	32.0	57.0	2.5	19.0	5.0	44.5	5.0	19.0	19.4
4	115.2	115.7	100.7	103.8	9.35	12,10	8.56	9.50	19.0	19.5	41.0	66.5	2.5	19.0	5.0	48.0	5.0	22.4	22.8

* – TOLERÂNCIAS ADOTADAS COMO PADRÃO QG, PERMITIDAS CONFORME ASME B16.11 PARÁGRAFO 6.1

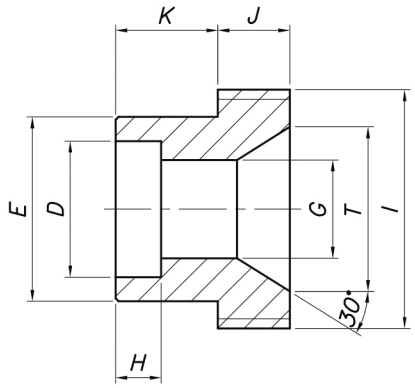

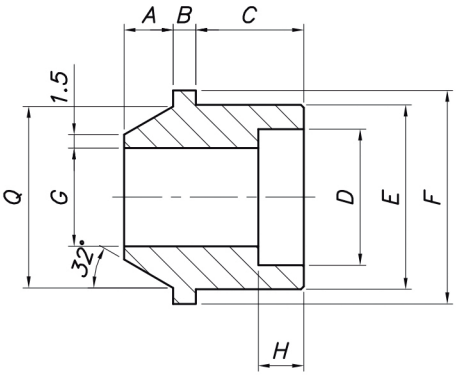

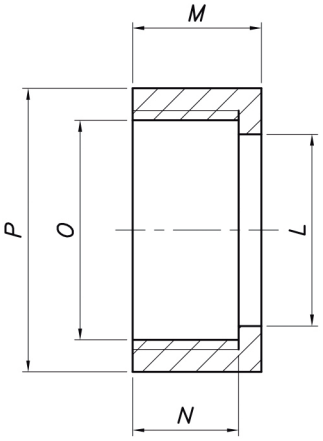

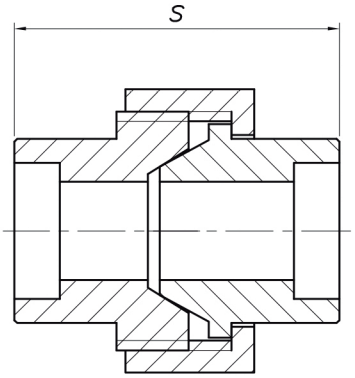

ø NOMINAL POL. (INCH)		1/4	3/8	1/2	3/4	1	1.1/4	1.1/2	2	2.1/2	3	TOLER.
mm	A	5.0	5.0	7.0	7.0	7.0	7.0	8.0	9.0	13.0	16.0	±04
	B	4.0	4.0	4.0	4.0	4.0	5.0	5.0	6.0	6.0	8.0	±0.4
	C	17.0	17.0	20.0	21.0	24.0	28.0	30.0	34.0	38.0	43.0	±0.4
	D	14.3	17.6	21.8	27.2	33.9	42.8	48.7	61.2	74.0	90.0	±0.2
	E	21.0	25.0	31.0	36.0	44.5	55.0	62.0	76.0	89.0	108.0	±0.2
	F	25.4	28.5	34.9	40.0	50.8	63.5	69.8	85.5	95.0	120.0	±0.2
	G	9.0	12.0	15.8	20.5	26.5	34.0	41.0	52.5	63.0	78.0	±0.2
	H	9.7	9.7	9.7	12.7	12.7	12.7	12.7	15.8	15.8	15.8	±0.4
	I	28.0	31.0	38.0	43.0	53.8	66.5	73.0	88.5	98.5	123.0	±0.1
	J	10.0	10.0	11.0	11.0	11.0	11.0	13.0	15.0	17.0	22.0	±0.4
	K	14.0	14.0	17.0	18.0	21.0	25.0	28.0	31.0	36.0	41.0	±0.4
	L	21.5	25.5	31.5	36.5	45.0	55.5	62.5	76.5	89.5	108.5	±0.2
	M	20.0	20.0	21.0	22.0	24.0	25.0	26.0	29.0	32.0	40.0	±0.4
	N	16.0	16.0	17.0	18.0	18.0	19.0	20.0	23.0	26.0	34.0	±0.4
	O	26.0	29.0	35.5	40.5	51.3	64.0	70.5	86.0	95.8	120.3	±0.1
	P	34.9	41.2	47.6	50.8	64.0	80.0	92.0	105.0	117.0	145.0	±0.2
	Q	18.2	21.2	27.5	32.2	38.2	45.7	54.0	66.7	82.2	101.0	±0.2
	S	47.0	47.0	54.0	57.0	63.5	71.5	79.5	89.0	100.0	118.0	±0.4
	T	15.7	18.7	25.0	28.5	33.9	42.6	49.6	63.0	78.5	96.0	±0.2

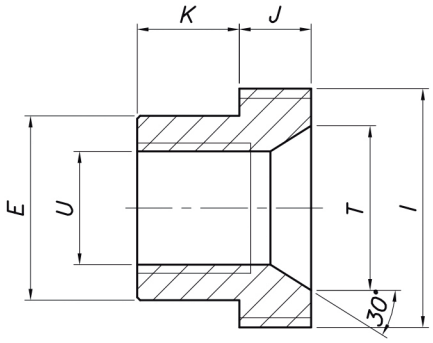

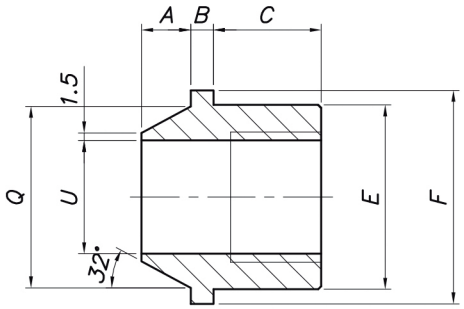

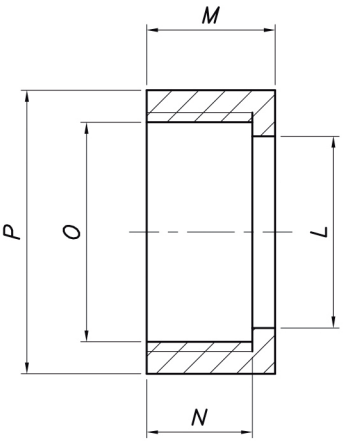

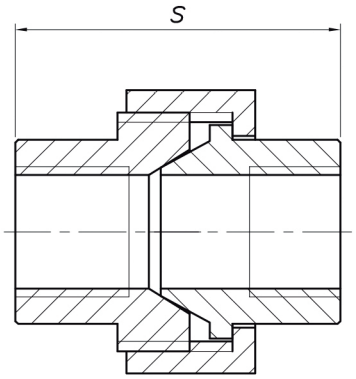

ø NOMINAL POL. (INCH)		1/4	3/8	1/2	3/4	1	1.1/4	1.1/2	2	2.1/2	3	TOLER.
mm	A	5.0	5.0	7.0	7.0	7.0	7.0	8.0	9.0	13.0	16.0	±0.4
	B	4.0	4.0	4.0	4.0	4.0	5.0	5.0	6.0	6.0	8.0	±0.4
	C	17.0	17.0	20.0	21.0	24.0	28.0	30.0	34.0	38.0	43.0	±0.4
	E	21.0	25.0	31.0	36.0	44.5	55.0	62.0	76.0	89.0	108.0	±0.2
	F	25.4	28.5	34.9	40.0	50.8	63.5	69.8	85.5	95.0	120.0	±0.2
	I	28.5	31.0	38.1	43.0	53.8	66.5	73.0	88.5	98.5	123.0	±0.1
	J	10.0	10.0	11.0	11.0	11.0	11.0	13.0	15.0	17.0	22.0	±0.4
	K	14.0	14.0	17.0	18.0	21.0	25.0	28.0	31.0	36.0	41.0	±0.4
	L	21.5	25.5	31.5	36.5	45.0	55.5	62.5	76.5	89.5	108.5	±0.2
	M	20.0	20.0	21.0	22.0	24.0	25.0	26.0	29.0	32.0	40.0	±0.4
	N	16.0	16.0	17.0	18.0	18.0	19.0	20.0	23.0	26.0	34.0	±0.4
	O	26.0	29.0	35.5	40.5	51.3	64.0	70.5	86.0	95.8	120.3	±0.1
	P	34.9	41.2	47.6	50.8	64.0	80.0	92.0	105.0	117.0	145.0	±0.2
	Q	20.2	23.7	29.7	34.7	40.7	49.7	57.0	70.2	86.2	106.0	±0.2
	S	47.0	47.0	54.0	57.0	63.5	71.5	79.5	89.0	100.0	118.0	±0.4
	T	17.7	21.2	27.2	31.0	36.4	46.6	52.6	66.5	82.5	101.0	±0.2
	U	11.0	14.5	18.0	23.0	29.0	38.0	44.0	56.0	67.0	83.0	±0.1

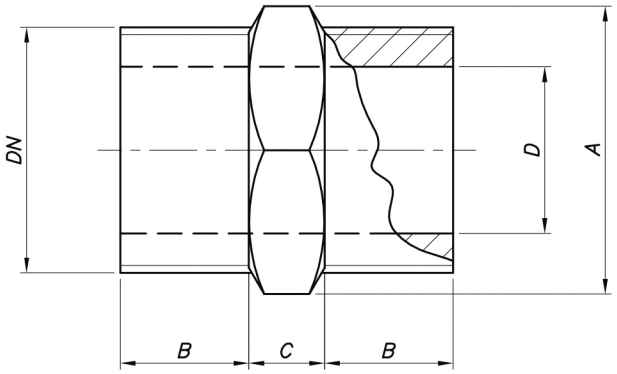

NIPLE SEXTAVADO

ø NOMINAL POL. (INCH)		1/8	1/4	3/8	1/2	3/4	1	1.1/4	1.1/2	2	2.1/2	3	4
mm	A	12.7	15.9	19.1	22.2	28.5	34.9	44.5	50.8	64.0	76.2	92.0	117.0
	B	10,0	11,0	12,0	15,0	16,0	19,0	21,0	22,0	24,0	30,0	34,0	40,0
	C	6,0	6,0	6,0	7,0	8,0	9,0	10,0	11,0	12,0	15,0	15,0	15,0
	D	5.0	7.0	9.0	12.5	18.0	23.0	29.0	33.0	43.0	63.0	67.0	90.0

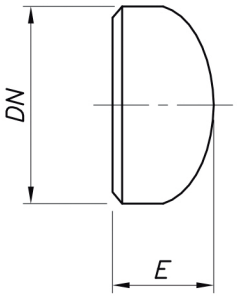

DIÂMETRO NOMINAL POL.(INCH)	DN			E (até esp. limite)			Esp. limite	E1 (acima esp. limite)		
	MIN.	NOM.	MAX.	MIN.	NOM.	MAX.		MIN.	NOM.	MAX.
1/2	20,5	21,3	22,9	22,0	25,0	22,9	4,57	22,0	25,0	28,0
3/4	25,9	26,7	28,3	22,0	25,0	28,3	3,81	22,0	25,0	28,0
1	32,6	33,4	35,0	35,0	38,0	35,0	4,57	35,0	38,0	41,0
1.1/4	41,4	42,2	43,8	35,0	38,0	43,8	4,83	35,0	38,0	41,0
1.1/2	47,5	48,3	49,9	35,0	38,0	49,9	5,08	35,0	38,0	41,0
2	59,5	60,3	61,9	35,0	38,0	61,9	5,59	41,0	44,0	47,0
2.1/2	72,2	73,0	74,6	35,0	38,0	74,6	7,11	48,0	51,0	54,0
3	87,3	88,9	90,5	48,0	51,0	90,5	7,62	61,0	64,0	67,0
3.1/2	100,0	101,6	103,2	61,0	64,0	103,2	8,13	73,0	76,0	79,0
4	112,7	114,3	115,9	61,0	64,0	115,9	8,64	73,0	76,0	79,0
5	139,7	141,3	143,7	70,0	76,0	82,0	9,65	83,0	89,0	95,0
6	166,7	168,3	170,7	83,0	89,0	95,0	10,92	96,0	102,0	108,0
8	217,5	219,1	221,5	96,0	102,0	108,0	12,70	121,0	127,0	133,0
10	269,8	273,0	277,0	121,0	127,0	133,0	12,70	146,0	152,0	158,0
12	320,6	323,8	327,8	146,0	152,0	158,0	12,70	172,0	178,0	184,0
14	352,4	355,6	359,6	159,0	165,0	171,0	12,70	185,0	191,0	197,0
16	403,2	406,4	410,4	172,0	178,0	184,0	12,70	197,0	203,0	206,0
18	403,2	457,0	410,4	197,0	203,0	209,0	12,70	223,0	229,0	235,0
20	503,2	508,0	514,4	223,0	229,0	235,0	12,70	248,0	254,0	260,0
22	554,2	559,0	565,4	248,0	254,0	260,0	12,70	248,0	254,0	260,0
24	605,2	610,0	616,4	261,0	267,0	273,0	12,70	299,0	305,0	311,0
26	655,6	660,4	666,8	257,0	267,0	277,0	---	---	---	---
28	706,4	711,2	717,6	257,0	267,0	277,0	---	---	---	---
30	757,2	762,0	768,4	257,0	267,0	277,0	---	---	---	---
32	808,2	813,0	819,4	257,0	267,0	277,0	---	---	---	---
36	909,2	914,0	920,4	257,0	267,0	277,0	---	---	---	---
40	1011,2	1016,0	1022,4	295,0	305,0	315,0	---	---	---	---
42	1062,2	1067,0	1073,4	295,0	305,0	315,0	---	---	---	---

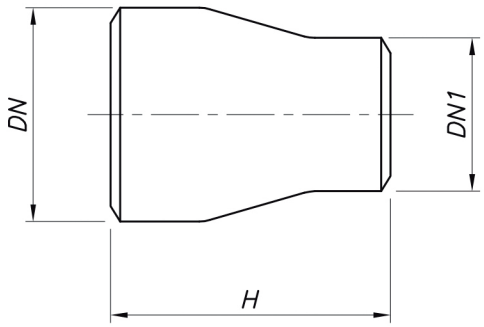

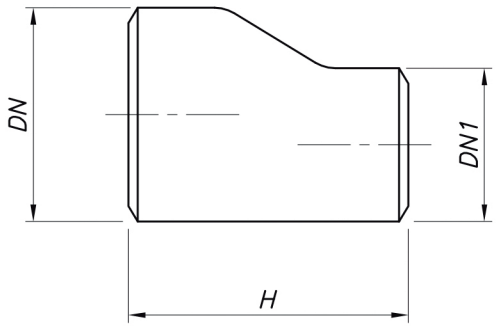

DIÂMETRO NOMINAL POL.(INCH)	DN / DN1		
	MIN.	NOM.	MAX.
1/2	20,5	21,3	22,9
3/4	25,9	26,7	28,3
1	32,6	33,4	35,0
1.1/4	41,4	42,2	43,8
1.1/2	47,5	48,3	49,9
2	59,5	60,3	61,9
2.1/2	72,2	73,0	74,6
3	87,3	88,9	90,5
3.1/2	100,0	101,6	103,2
4	112,7	114,3	115,9
5	139,7	141,3	143,7
6	166,7	168,3	170,7
8	217,5	219,1	221,5
10	269,8	273,0	277,0
12	320,6	323,8	327,8
14	352,4	355,6	359,6
16	403,2	406,4	410,4
18	403,2	457,0	410,4
20	503,2	508,0	514,4
22	554,2	559,0	565,4
24	605,2	610,0	616,4
26	655,6	660,4	666,8
28	706,4	711,2	717,6
30	757,2	762,0	768,4
32	808,2	813,0	819,4
36	909,2	914,0	920,4
40	1011,2	1016,0	1022,4
42	1062,2	1067,0	1073,4

DIMENSÃO NOMINAL POL.(INCH)	H		
	MIN.	NOM.	MAX.
3/4 X 1/2 A 3/4 X 3/8	36,0	38,0	40,0
1 X 3/4 A 1 X 1.1/2	49,0	51,0	53,0
1.1/4 X 1 A 1.1/4 X 1/2	49,0	51,0	53,0
1.1/2 X 1.1/4 A 1.1/2 X 1/2	62,0	64,0	66,0
2 X 1.1/2 A 2 X 3/4	74,0	76,0	78,0
2.1/2 X 2 A 2.1/2 X 1	87,0	89,0	91,0
3 X 2.1/2 A 3 X 1.1/4	87,0	89,0	91,0
4 X 3 A 4 X 1.1/2	100,0	102,0	104,0
5 X 4 A 5 X 2	125,0	127,0	129,0
6 X 5 A 6 X 2.1/2	138,0	140,0	142,0
8 X 6 A 8 X 3.1/2	150,0	152,0	154,0
10 X 8 A 10 X 4	176,0	178,0	180,0
12 X 10 A 12 X 5	201,0	203,0	205,0
14 X 12 A 14 X 6	328,0	330,0	332,0
16 X 14 A 16 X 8	354,0	356,0	358,0
18 X 16 A 18 X 10	379,0	381,0	383,0
20 X 18 A 20 X 12	506,0	508,0	510,0
22 X 20 A 22 X 14	506,0	508,0	510,0
24 X 22 A 24 X 16	506,0	508,0	510,0
26 X 24 A 26 X 18	605,0	610,0	615,0
28 X 26 A 28 X 18	605,0	610,0	615,0
30 X 28 A 30 X 20	605,0	610,0	615,0
32 X 30 A 32 X 24	605,0	610,0	615,0
36 X 32 A 36 X 24	605,0	610,0	615,0
40 X 36 A 40 X 30	605,0	610,0	615,0
42 X 40 A 42 X 30	605,0	610,0	615,0

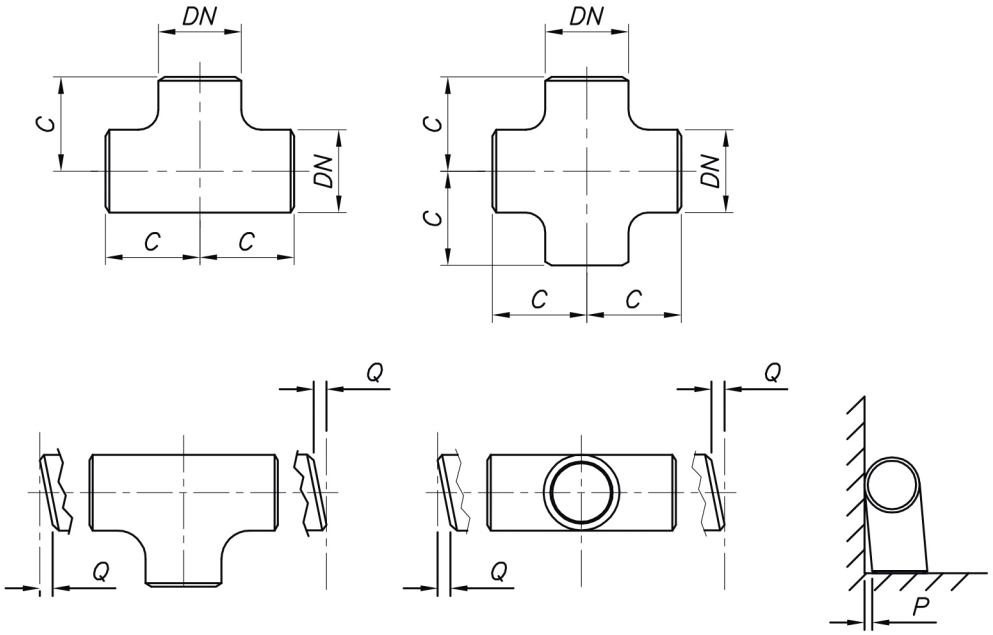

DIÂMETRO NOMINAL POL.(INCH)	DN			C			P	Q
	MIN.	NOM.	MAX.	MIN.	NOM.	MAX.	TOLERÂNCIA	TOLERÂNCIA
1/2	20,5	21,3	22,9	23,0	25,0	27,0	+/− 2mm	+/− 1mm
3/4	25,9	26,7	28,3	27,0	29,0	31,0		
1	32,6	33,4	35,0	360	38,0	40,0		
1.1/4	41,4	42,2	43,8	46,0	48,0	50,0		
1.1/2	47,5	48,3	49,9	55,0	57,0	59,0		
2	59,5	60,3	61,9	62,0	64,0	66,0		
2.1/2	72,2	73,0	74,6	74,0	76,0	78,0		
3	87,3	88,9	90,5	84,0	86,0	88,0	+/− 4mm	+/− 2mm
4	112,7	114,3	115,9	103,0	105,0	107,0	+/− 5mm	+/− 3mm
5	139,7	141,3	143,7	122,0	124,0	126,0	+/− 6mm	+/− 3mm
6	166,7	168,3	170,7	141,0	143,0	145,0		
8	217,5	219,1	221,5	176,0	178,0	180,0		
10	269,8	273,0	277,0	214,0	216,0	218,0	+/− 10mm	+/− 4mm
12	320,6	323,8	327,8	252,0	254,0	256,0		
14	352,4	355,6	359,6	277,0	279,0	281,0		
16	403,2	406,4	410,4	303,0	305,0	307,0		
18	453,8	457,0	461,0	341,0	343,0	345,0		
20	503,2	508,0	514,4	379,0	381,0	383,0	+/− 10mm	+/− 5mm
24	605,2	610,0	616,4	430,0	432,0	434,0		
30	757,2	762,0	768,4	556,0	559,0	562,0	+/− 13mm	+/− 5mm
32	808,2	813,0	819,4	592,0	597,0	602,0	+/− 19mm	+/− 5mm
36	909,2	914,0	920,4	668,0	673,0	678,0		
40	1011,2	1016,0	1022,4	744,0	749,0	754,0		
42	1062,2	1067,0	1073,4	757,0	762,0	767,0		

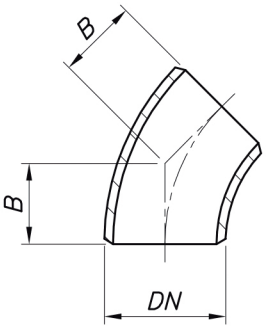
B
B
DN

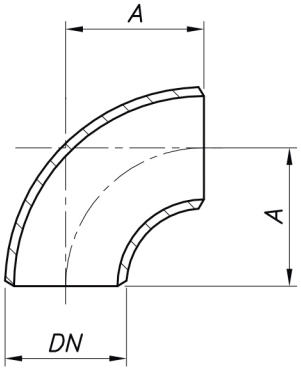
A
A
DN

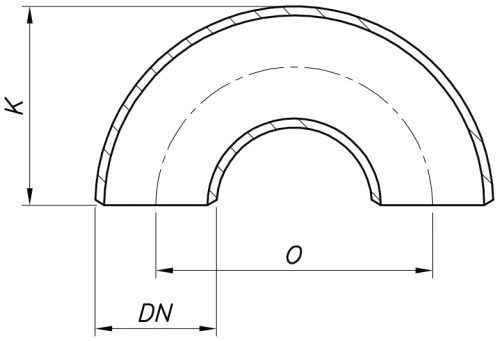
K
O
DN

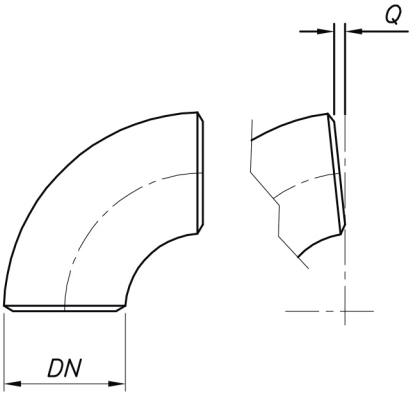
Q
DN

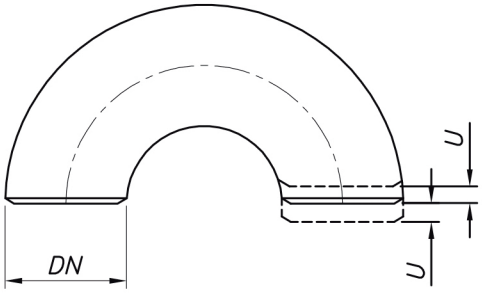
U
U
DN

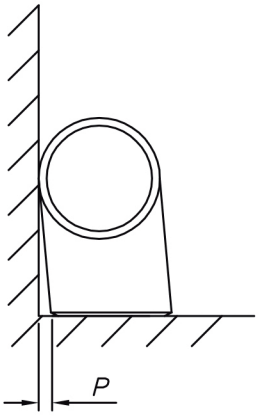
P

DIÂMETRO NOMINAL POL.(INCH)	Diâm. Ext.			A			B			K			O			P	Q	U
	MIN.	NOM.	MAX.	MIN.	NOM.	MAX.	MIN.	NOM.	MAX.	MIN.	NOM.	MAX.	MIN.	NOM.	MAX.	TOLERÂNCIA	TOLERÂNCIA	TOLERÂNCIA
1/2	20,5	21,3	22,9	36	38	40	14	16	18	42	48	54	70,0	76	82,0	+/− 2mm	+/− 1mm	+/− 1mm
3/4	25,9	26,7	28,3	36	38	40	17	19	21	45	51	57	70,0	76	82,0			
1	32,6	33,4	35,0	36	38	40	20	22	24	50	56	62	70,0	76	82,0			
1.1/4	41,4	42,2	43,8	46	48	50	23	25	27	64	70	76	89,0	95	101,0			
1.1/2	47,5	48,3	49,9	55	57	59	27	29	31	77	83	89	108,0	114	120,0			
2	59,5	60,3	61,9	74	76	78	33	35	37	100	106	112	146,0	152	158,0			
2.1/2	72,2	73,0	74,6	93	95	97	42	44	46	126	132	138	184,0	190	196,0			
3	87,3	88,9	90,5	112	114	116	49	51	53	153	159	165	223,0	229	235,0			
3.1/2	100,0	101,6	103,2	131	133	135	55	57	59	178	184	190	261,0	267	273,0			
4	112,7	114,3	115,9	150	152	154	62	64	66	204	210	216	299,0	305	311,0			
5	139,7	141,3	143,7	188	190	192	77	79	81	256	262	268	375,0	381	387,0	+/− 4mm	+/− 2mm	
6	166,7	168,3	170,7	227	229	231	93	95	97	307	313	319	451,0	457	463,0			
8	217,5	219,1	221,5	303	305	307	125	127	129	408	414	420	604,0	610	616,0			
10	269,8	273,0	277,0	379	381	383	157	159	161	512	518	524	752	762	772	+/− 5mm	+/− 3mm	+/− 2mm
12	320,6	323,8	327,8	455	457	459	188	190	192	613	619	625	904	914	924			
14	352,4	355,6	359,6	531	533	535	220	222	224	705	711	717	1057	1067	1077	+/− 6mm	+/− 3mm	
16	403,2	406,4	410,4	608	610	612	252	254	256	807	813	819	1209	1219	1229			
18	453,8	457,0	461,0	684	686	688	284	286	288	908	914	920	1362	1372	1382	+/− 10mm	+/− 4mm	
20	503,2	508,0	514,4	760	762	764	316	318	320	1010	1016	1022	1514	1524	1534			
22	554,2	559,0	565,4	836	838	840	341	343	345	1112	1118	1124	1666	1676	1686			
24	605,2	610,0	616,4	912	914	916	379	381	383	1213	1219	1225	1819	1829	1839			
26	655,6	660,4	666,8	988	991	994	402	405	408	...	...	...	...	...	...	+/− 10mm	+/− 5mm	...
28	706,4	711,2	717,6	1064	1067	1070	435	438	441	...	...	...	...	...	...			
30	757,2	762,0	768,4	1140	1143	1146	467	470	473	...	...	...	...	...	...			
32	808,2	813,0	819,4	1214	1219	1224	497	502	507	...	...	...	...	...	...	+/− 13mm	+/− 5mm	
36	909,2	914,0	920,4	1367	1372	1377	560	565	570	...	...	...	...	...	...			
40	1011,2	1016,0	1022,4	1519	1524	1529	627	632	637	...	...	...	...	...	...			
42	1062,2	1067,0	1073,4	1595	1600	1605	655	660	665	...	...	...	...	...	...			

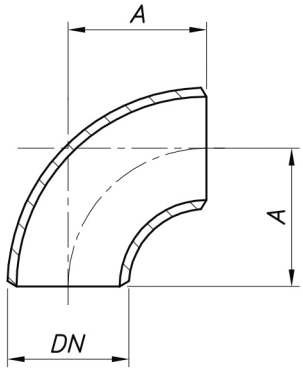

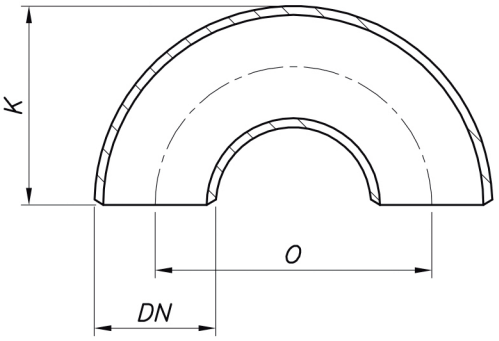

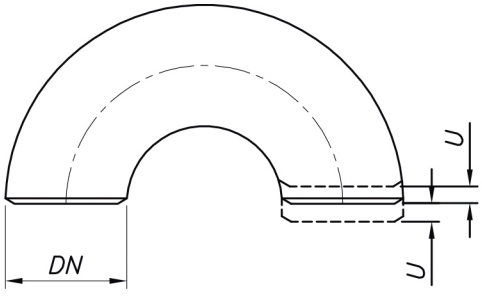

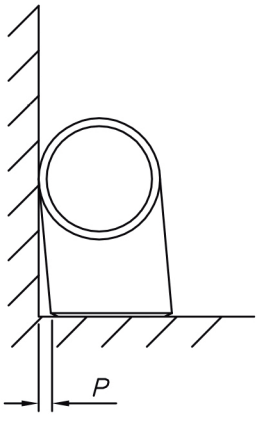

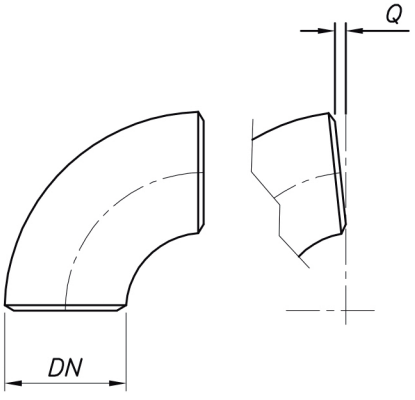

DIÂMETRO NOMINAL POL.(INCH)	Diâm. Ext.			A			K			O			P	Q	U
	MIN.	NOM.	MAX.	MIN.	NOM.	MAX.	MIN.	NOM.	MAX.	MIN.	NOM.	MAX.	TOLER.	TOLER.	TOLER.
1	32,6	33,4	35,0	23	25	27	35	41	47	45,0	51	57,0	± 2mm	± 1mm	± 1mm
1.1/4	41,4	42,2	43,8	30	32	34	46	52	58	58,0	64	70,0			
1.1/2	47,5	48,3	49,9	36	38	40	56	62	68	70,0	76	82,0			
2	59,5	60,3	61,9	49	51	53	75	81	87	96,0	102	108,0			
2.1/2	72,2	73,0	74,6	62	64	66	94	100	106	121,0	127	133,0			
3	87,3	88,9	90,5	74	76	78	115	121	127	146,0	152	158,0			
3.1/2	100,0	101,6	103,2	87	89	91	134	140	146	172,0	178	184,0			
4	112,7	114,3	115,9	100	102	104	153	159	165	197,0	203	209,0			
5	139,7	141,3	143,7	125	127	129	191	197	203	248,0	254	260,0	± 4mm	± 2mm	
6	166,7	168,3	170,7	150	152	154	231	237	243	299,0	305	311,0			
8	217,5	219,1	221,5	201	203	205	307	313	319	400,0	406	412,0			
10	269,8	273,0	277,0	252	254	256	385	391	397	498	508	518	± 5mm	± 3mm	± 2mm
12	320,6	323,8	327,8	303	305	307	461	467	473	600	610	620			
14	352,4	355,6	359,6	354	356	358	527	533	539	701	711	721	± 6mm	± 3mm	
16	403,2	406,4	410,4	404	406	408	604	610	616	803	813	823			
18	453,8	457,0	461,0	455	457	459	680	686	692	904	914	924	± 10mm	± 4mm	
20	503,2	508,0	514,4	506	508	510	756	762	768	1006	1016	1026			
22	554,2	559,0	565,4	557	559	561	832	838	844	1108	1118	1128			
24	605,2	610,0	616,4	608	610	612	908	914	920	1209	1219	1229			

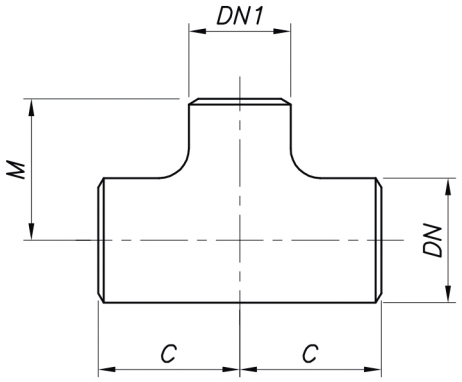

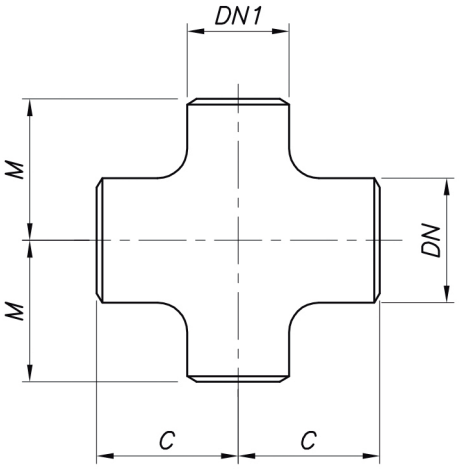

DIÂMETRO NOMINAL POL.(INCH)	DN			DN1			C			M		
	MIN.	NOM.	MAX.	MIN.	NOM.	MAX.	MIN.	NOM.	MAX.	MIN.	NOM.	MAX.
1/2 X 3/8	20,5	21,3	22,9	16,5	17,3	18,9	23,0	25,0	27,0	23,0	25,0	27,0
1/2 X 1/4	20,5	21,3	22,9	20,5	21,3	22,9	23,0	25,0	27,0	23,0	25,0	27,0
3/4 X 1/2	25,9	26,7	28,3	20,5	21,3	22,9	27,0	29,0	31,0	27,0	29,0	31,0
3/4 X 3/8	25,9	26,7	28,3	16,5	17,3	18,9	27,0	29,0	31,0	27,0	29,0	31,0
1 X 3/4	32,6	33,4	35,0	25,9	26,7	28,3	36,0	38,0	40,0	36,0	38,0	40,0
1 X 1/2	32,6	33,4	35,0	20,5	21,3	22,9	36,0	38,0	40,0	36,0	38,0	40,0
1.1/4 X 1	41,4	42,2	43,8	32,6	33,4	35,0	46,0	48,0	50,0	46,0	48,0	50,0
1.1/4 X 3/4	41,4	42,2	43,8	25,9	26,7	28,3	46,0	48,0	50,0	46,0	48,0	50,0
1.1/4 X 1/2	41,4	42,2	43,8	20,5	21,3	22,9	46,0	48,0	50,0	46,0	48,0	50,0
1.1/2 X 1.1/4	47,5	48,3	49,9	41,4	42,2	43,8	55,0	57,0	59,0	55,0	57,0	59,0
1.1/2 X 1	47,5	48,3	49,9	32,6	33,4	35,0	55,0	57,0	59,0	55,0	57,0	59,0
1.1/2 X 3/4	47,5	48,3	49,9	25,9	26,7	28,3	55,0	57,0	59,0	55,0	57,0	59,0
1.1/2 X 1/2	47,5	48,3	49,9	20,5	21,3	22,9	55,0	57,0	59,0	55,0	57,0	59,0
2 X 1.1/2	59,5	60,3	61,9	47,5	48,3	49,9	62,0	64,0	66,0	58,0	60,0	62,0
2 X 1.1/4	59,5	60,3	61,9	41,4	42,2	43,8	62,0	64,0	66,0	55,0	57,0	59,0
2 X 1	59,5	60,3	61,9	32,6	33,4	35,0	62,0	64,0	66,0	49,0	51,0	53,0
2 X 3/4	59,5	60,3	61,9	25,9	26,7	28,3	62,0	64,0	66,0	42,0	44,0	46,0
2.1/2 X 2	72,2	73,0	74,6	59,5	60,3	61,9	74,0	76,0	78,0	68,0	70,0	72,0
2.1/2 X 1.1/2	72,2	73,0	74,6	47,5	48,3	49,9	74,0	76,0	78,0	65,0	67,0	69,0
2.1/2 X 1.1/4	72,2	73,0	74,6	41,4	42,2	43,8	74,0	76,0	78,0	62,0	64,0	66,0
2.1/2 X 1	72,2	73,0	74,6	32,6	33,4	35,0	74,0	76,0	78,0	55,0	57,0	59,0
3 X 2.1/2	87,3	88,9	90,5	72,2	73,0	74,6	84,0	86,0	88,0	81,0	83,0	85,0
3 X 2	87,3	88,9	90,5	59,5	60,3	61,9	84,0	86,0	88,0	74,0	76,0	78,0
3 X 1.1/2	87,3	88,9	90,5	47,5	48,3	49,9	84,0	86,0	88,0	71,0	73,0	75,0

DIÂMETRO NOMINAL POL.(INCH)	DN			DN1			C			M		
	MIN.	NOM.	MAX.	MIN.	NOM.	MAX.	MIN.	NOM.	MAX.	MIN.	NOM.	MAX.
3 X 1.1/4	87,3	88,9	90,5	41,4	42,2	43,8	84,0	86,0	88,0	68,0	70,0	72,0
4 X 3	112,7	114,3	115,9	87,3	88,9	90,5	103,0	105,0	107,0	96,0	98,0	100,0
4 X 2.1/2	112,7	114,3	115,9	72,2	73,0	74,6	103,0	105,0	107,0	93,0	95,0	97,0
4 X 2	112,7	114,3	115,9	59,5	60,3	61,9	103,0	105,0	107,0	87,0	89,0	91,0
4 X 1.1/2	112,7	114,3	115,9	47,5	48,3	49,9	103,0	105,0	107,0	84,0	86,0	88,0
5 X 4	139,7	141,3	143,7	112,7	114,3	115,9	122,0	124,0	126,0	115,0	117,0	119,0
5 X 3	139,7	141,3	143,7	87,3	88,9	90,5	122,0	124,0	126,0	109,0	111,0	113,0
5 X 2.1/2	139,7	141,3	143,7	72,2	73,0	74,6	122,0	124,0	126,0	106,0	108,0	110,0
5 X 2	139,7	141,3	143,7	59,5	60,3	61,9	122,0	124,0	126,0	103,0	105,0	107,0
6 X 5	166,7	168,3	170,7	139,7	141,3	143,7	141,0	143,0	145,0	135,0	137,0	139,0
6 X 4	166,7	168,3	170,7	112,7	114,3	115,9	141,0	143,0	145,0	128,0	130,0	132,0
6 X 3	166,7	168,3	170,7	87,3	88,9	90,5	141,0	143,0	145,0	122,0	124,0	126,0
6 X 2.1/2	166,7	168,3	170,7	72,2	73,0	74,6	141,0	143,0	145,0	119,0	121,0	123,0
8 X 6	217,5	219,1	221,5	166,7	168,3	170,7	176,0	178,0	180,0	166,0	168,0	170,0
8 X 5	217,5	219,1	221,5	139,7	141,3	143,7	176,0	178,0	180,0	160,0	162,0	164,0
8 X 4	217,5	219,1	221,5	112,7	114,3	115,9	176,0	178,0	180,0	154,0	156,0	158,0
10 X 8	269,8	273,0	277,0	217,5	219,1	221,5	214,0	216,0	218,0	201,0	203,0	205,0
10 X 6	269,8	273,0	277,0	166,7	168,3	170,7	214,0	216,0	218,0	192,0	194,0	196,0
10 X 5	269,8	273,0	277,0	139,7	141,3	143,7	214,0	216,0	218,0	189,0	191,0	193,0
10 X 4	269,8	273,0	277,0	112,7	114,3	115,9	214,0	216,0	218,0	182,0	184,0	186,0
12 X 10	320,6	323,8	327,8	269,8	273,0	277,0	252,0	254,0	256,0	239,0	241,0	243,0
12 X 8	320,6	323,8	327,8	217,5	219,1	221,5	252,0	254,0	256,0	227,0	229,0	231,0
12 X 6	320,6	323,8	327,8	166,7	168,3	170,7	252,,0	254,0	256,0	217,0	219,0	221,0
12 X 5	320,6	323,8	327,8	139,7	141,3	143,7	252,0	254,0	256,0	214,0	216,0	218,0

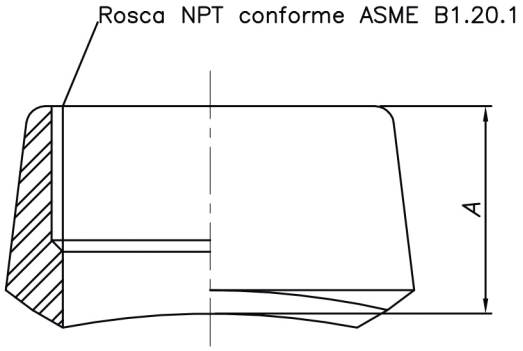

Dimensões em mm

Ø EXT DN. (MM)	Ø NOM. POL. (INCH)	Medida "A"	
		Classe 3000	Classe 6000
6	1/8	19,1	–
8	1/4	19,1	–
10	3/8	20,6	–
15	1/2	25,4	31,8
20	3/4	26,9	36,6
25	1	33,3	39,6
32	1.1/4	33,3	41,1
40	1.1/2	35,1	42,9
50	2	38,1	52,3
65	2.1/2	46,0	–
80	3	50,8	–
100	4	57,2	–

Tolerancias para medida "A": 6 – 20 +/– 0,8 mm
25 – 100 +/– 1,6 mm

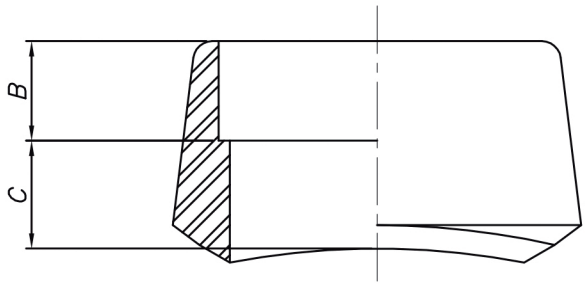

Dimensões em mm

Ø EXT DN. (MM)	Ø NOM. POL. (INCH)	B Min. (a)	Medida "C"	
			Classe 3000	Classe 6000
6	1/8	9,7	10,4	–
8	1/4	9,7	10,4	–
10	3/8	9,7	12,7	–
15	1/2	9,7	15,7	23,9
20	3/4	12,7	15,7	25,4
25	1	12,7	22,4	28,7
32	1.1/4	12,7	22,4	30,2
40	1.1/2	12,7	23,9	31,8
50	2	15,7	23,9	36,6
65	2.1/2	15,7	25,4	–
80	3	15,7	30,2	–
100	4	19,1	30,2	–

(a): Medida "B", encaixe mínimo conforme ASME B16.11

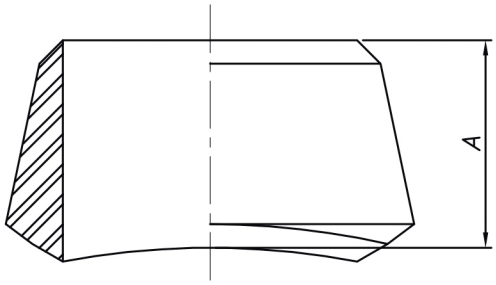

Dimensões em mm

ø EXT DN. (MM)	ø NOM. POL. (INCH)	Medida "A"					
		STANDARD		Extra–Forte		SCH 160	
		Curto	Completo	Curto	Completo	Curto	Completo
6	1/8	15,7	–	15,7	–	–	–
8	1/4	15,7	–	15,7	–	–	–
10	3/8	19,1	–	19,1	–	–	–
15	1/2	19,1	19,1	19,1	19,1	28,4	28,4
20	3/4	22,4	22,4	22,4	22,4	31,8	31,8
25	1	26,9	26,9	26,9	26,9	38,1	38,1
32	1.1/4	31,8	31,8	31,8	31,8	44,5	44,5
40	1.1/2	33,3	33,3	33,3	33,3	50,8	50,8
50	2	38,1	38,1	38,1	38,1	55,4	55,4
65	2.1/2	41,1	41,1	41,1	41,1	62,0	62,0
80	3	44,5	44,5	44,5	44,5	73,2	73,2
90	3.1/2	47,8	50,8	47,8	50,8	–	–
100	4	50,8	50,8	50,8	50,8	84,1	84,1
125	5	57,2	57,2	57,2	57,2	93,7	93,7
150	6	60,5	60,5	77,7	77,7	104,6	104,6
200	8	69,9	69,9	98,6	98,6	–	–
250	10	77,7	77,7	93,7	88,9	–	–
300	12	85,9	85,9	103,1	100,1	–	–
350	14	88,9	88,9	100,1	104,6	–	–
400	16	93,7	93,7	106,2	112,8	–	–
450	18	96,8	103,1	111,3	119,1	–	–
500	20	101,6	117,3	119,1	127,0	–	–
600	24	115,8	136,7	139,7	139,7	–	–

Tolerancias para medida "A": 6 – 20 +/– 0,8 mm
25 – 100 +/– 1,6 mm
125 – 300 +/– 3,2 mm
350 – 600 +/– 4,8 mm